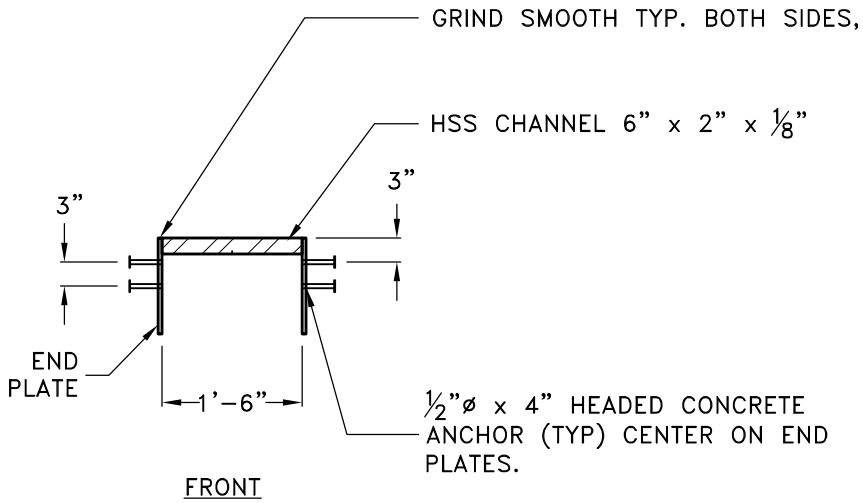

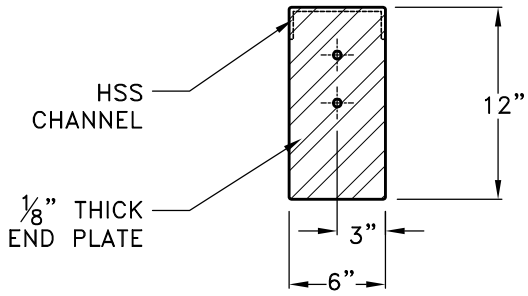

END PLATE SIDE-A

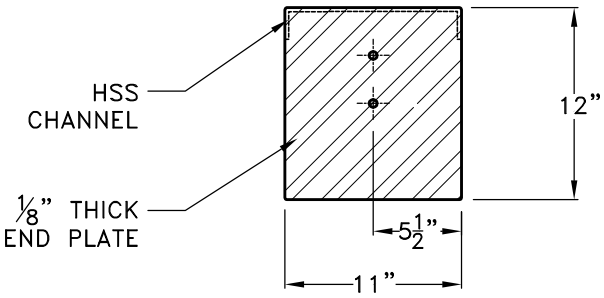

END PLATE SIDE-B

NOTES

1. SINGLE BEVEL GROOVE WELD.

CITY OF ALBANY, OREGON PUBLIC WORKS DEPARTMENT		
METAL CURB DETAILS		
NO SCALE	JANUARY 2015	NO. 617